RoHS COMPLIANT

NOTES:

Material: Phosphor Bronze

Accepts wire range: AWG #28 ~ #32

1010TPB*000

└─ O=Tin plated 120u" min. over 30 u"min. nickel overall
U=Selective gold flash over 30 u"min. nickel overall

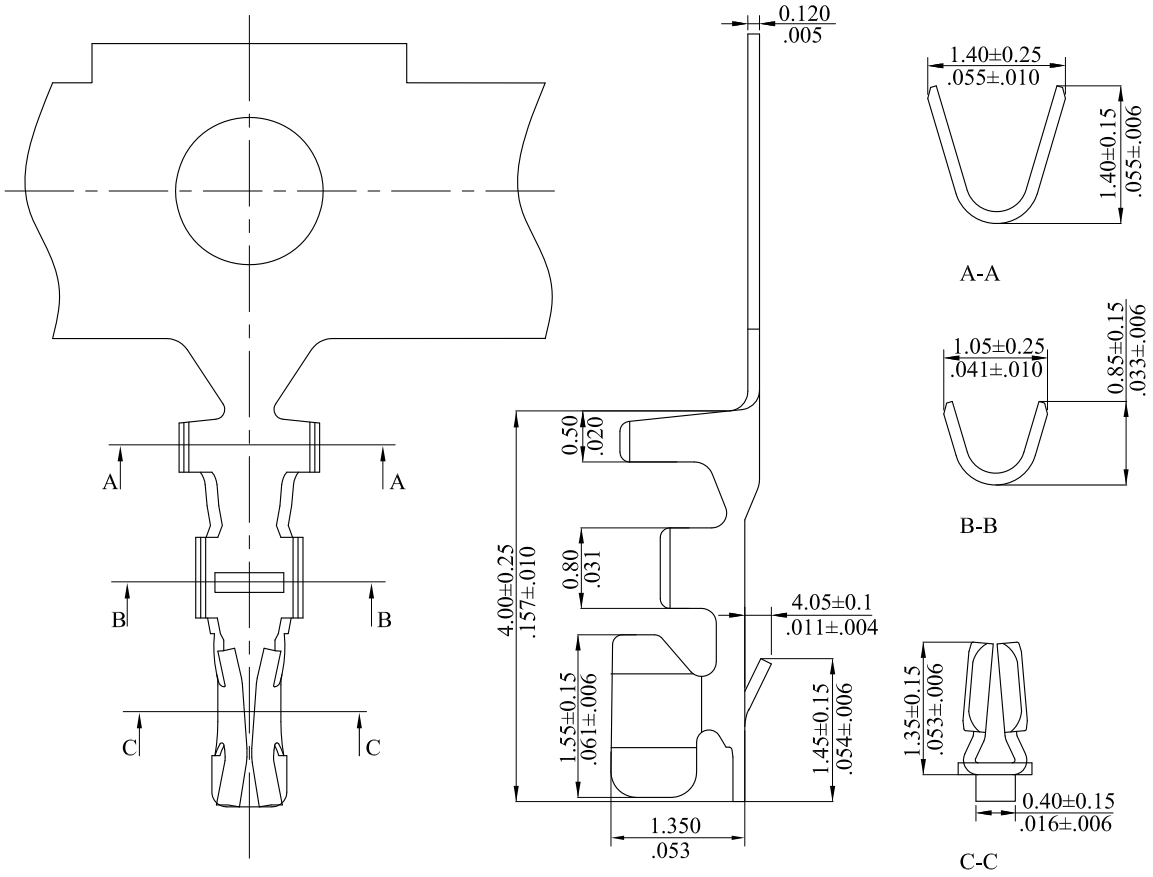

REV.	ECO. NO.	CHG.	APP.
C	ES101138		
B	ES050417		
A	DWG REL		

LEOCO CORPORATION

GENERAL TOLERANCES:
(UNLESS SPECIFIED)

	mm	inch
1 PLACE	± 0.30	± ——
2 PLACES	± 0.20	± .012
3 PLACES	± 0.10	± .008
4 PLACES	± ——	± .004
ANGULAR ± (1°)		

APPROVED:
DATE:
CHECKED:
DATE:
DRAWN:
DATE:

PART NO.: 1010TPB*000

TITLE: TERMINAL

DRAWING NO.: 101002S

UNITS	SCALE	SIZE	SHEET	REV.
mm / inch	13:1	A4	1/1	C