Material:

Housing: HTN with 30%G.F,UL 94V-0.
Blue(300C) Color.
USB2.0 Contact:Copper alloy
USB3.0 Contact:Copper alloy
SHELL:SPCC,30u"Min,nickel plated over
30u"Min.Cu underplating overall.

RoHS COMPLIANT

Ordering Information

2077 P A M * * 00
1 2 3 4 5 6

1. Series No.
2. P = Plug
3. A = Single-A Type.
4. Shell and Terminal type:
   M=Shell Right angle and Terminal SMT Type.
5. Contact Plating:
   F = Selective gold flash over 50 μ " min. nickel plated overall
   J = 15μ"min.selective gold plated over 50μ" min.nickel overall
   K = 30μ"min.selective gold plated over 50μ" min.nickel overall
6. Color:1=Black 2=White 0=Ivory 7=Blue

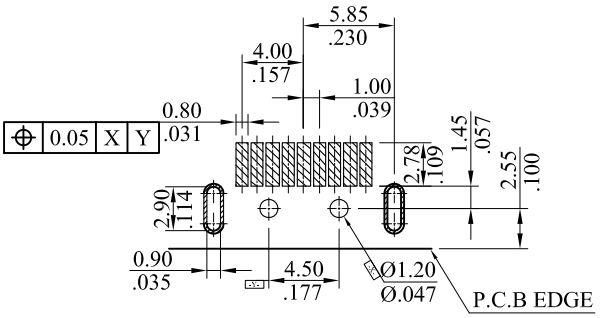

RECOMMEND P.C.B LAYOUT(THICKNESS=1.2mm)
(COMPONENT SIDE) TOLERANCE±0.03

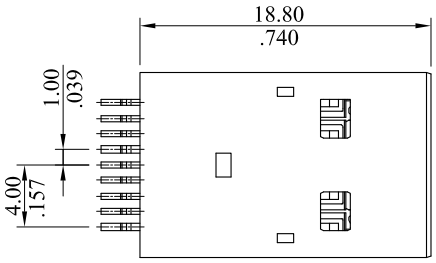

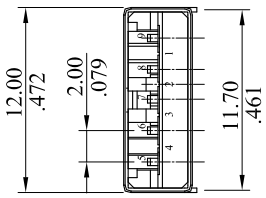

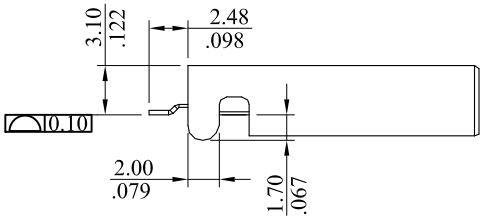

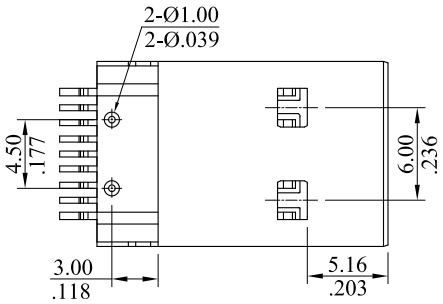

A	DWG REL		
REV.	ECO. NO.	CHG.	APP.

LEOCO CORPORATION

GENERAL TOLERANCES:
(UNLESS SPECIFIED)

	mm	inch
1 PLACE	± 0.30	± ——
2 PLACES	± 0.20	± .012
3 PLACES	± 0.10	± .008
4 PLACES	± ——	± .004
ANGULAR ± (1°)		

APPROVED:
DATE:
CHECKED:
DATE:
DRAWN:
DATE:

PART NO.: 2077PAM**00

TITLE: USB 3.0, plug 9 pos,1.0 pitch, R/A,SMT type

DRAWING NO.: 207701S

UNITS	SCALE	SIZE	SHEET	REV.
mm / inch	2:1	A4	1/1	A