RoHS COMPLIANT

CUSTOMER DRAWING			
REV.	ECO. NO.	DESCRIPTION	DATE
A	DWG. REL.	APPROVED	2022.10.19

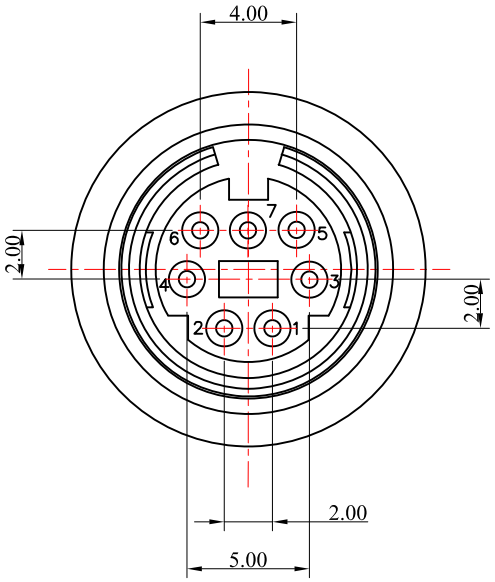

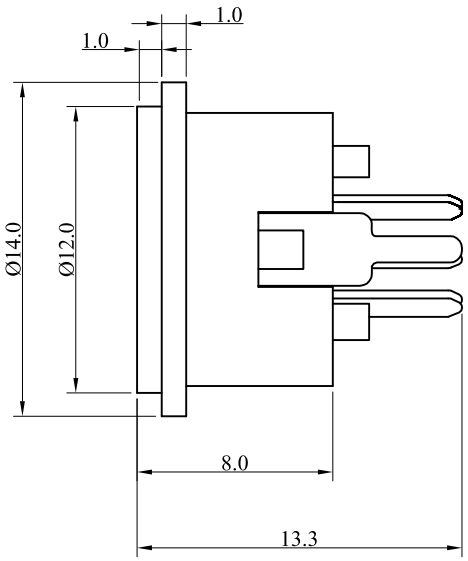

Note:

Material:
Insulator: Thermoplastic, UL94 V-0, Black
Terminal: Brass
Shell: Brass

General Part Number:
MDST- 07 * 000
1 2

1. No. of circuit.
2. Plating:
   0=Tin plated 120u" min.over 30u" min.Nickel underplating overall
   S=Silver plated
   U=Gold flash over 30u" min.Nickel underplating overall

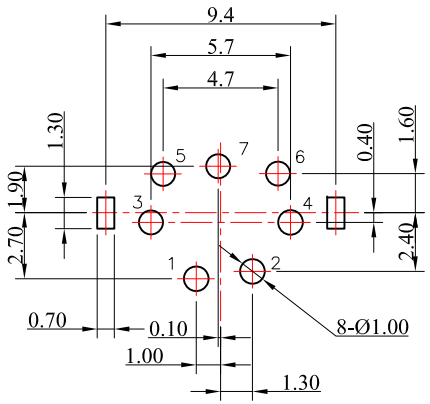

PCB Layout (Bottom View)

TOLERANCE UNLESS OTHERWISE SPECIFIED		
mm	mm	inch
1 PLACE	± 0.30	± −−
2 PLACES	± 0.20	± −−
3 PLACES	± 0.10	± −−
4 PLACES	± −−	± −−
ANGULAR ±1°		

LEOCO CORPORATION
http://www.leoco.com.tw

APPROVED BY:	DATE:	TITLE:
Chard	2022.10.19	7 Pin Socket Mini Din
CHECKED BY: Angel	DATE: 2022.10.19	
DRAWN BY: Spring	DATE: 2022.10.19	PART NO.: MDST-07*000
SIZE: A3	SCALE: 1:1	DRAWING NO.: MDST08S / REV.: A / SHEET: 1 OF 1